Cambridge Assessment International Education

Cambridge IGCSE™

CANDIDATE NAME	

CENTRE NUMBER						CANDIDATE NUMBER					

PHYSICS **0625/43**

Paper 4 Theory (Extended) **May/June 2020**

1 hour 15 minutes

You must answer on the question paper.

No additional materials are needed.

INSTRUCTIONS

- Answer **all** questions.
- Use a black or dark blue pen. You may use an HB pencil for any diagrams or graphs.
- Write your name, centre number and candidate number in the boxes at the top of the page.
- Write your answer to each question in the space provided.
- Do **not** use an erasable pen or correction fluid.
- Do **not** write on any bar codes.
- You may use a calculator.
- You should show all your working and use appropriate units.
- Take the weight of 1.0 kg to be 10 N (acceleration of free fall = 10 m/s^2).

INFORMATION

- The total mark for this paper is 80.
- The number of marks for each question or part question is shown in brackets [ ].

This document has **16** pages. Blank pages are indicated.

DC (ST/CT) 194262/3
© UCLES 2020

[Turn over

www.root19.com +91 - 9969 353 391

1 **(a)** Define *acceleration*.

.....

..... [1]

(b) Fig. 1.1 shows two speed–time graphs, A and B, and two distance–time graphs, C and D.

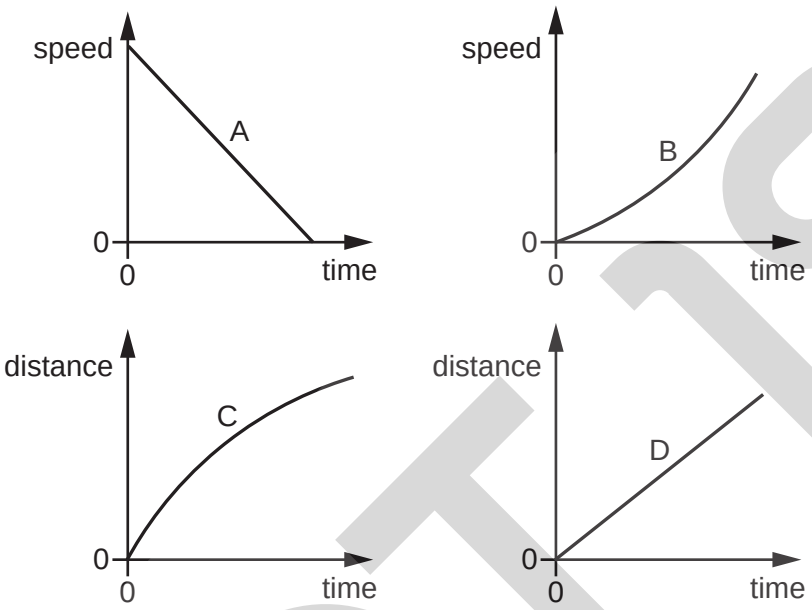

Fig. 1.1

Describe the motion shown by:

(i) graph A .....

..... [2]

(ii) graph B .....

..... [2]

(iii) graph C .....

..... [1]

(iv) graph D. .....

..... [1]

[Total: 7]

www.root19.com +91 - 9969 353 391

2 A scientist fills a container with sea water. The container has dimensions 30 cm × 30 cm × 40 cm. The density of sea water is 1020 kg / m^3.

(a) Calculate the mass of the sea water in the container.

mass = ... [3]

(b) Fig. 2.1 shows a submarine. The submarine is fully submerged in the sea.

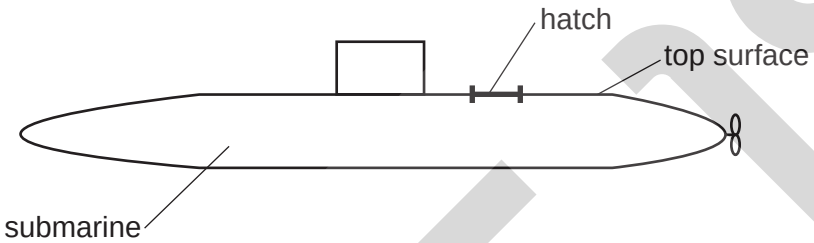

Fig. 2.1

(i) The atmospheric pressure is 100 kPa and the total pressure on the top surface of the submarine is 500 kPa.

Calculate the depth of the top surface of the submarine below the surface of the sea.

depth = ... [3]

(ii) A hatch (an opening door) on the top surface of the submarine has an area of 0.62 m^2.

Calculate the downward force on the hatch due to the total pressure on the top surface of the submarine.

force = ... [2]

[Total: 8]

© UCLES 2020

www.root19.com
+91 - 9969 353 301

3 In a double-decker bus there are two passenger compartments, one above the other.

(a) Fig. 3.1 shows a double-decker bus on a tilted platform.

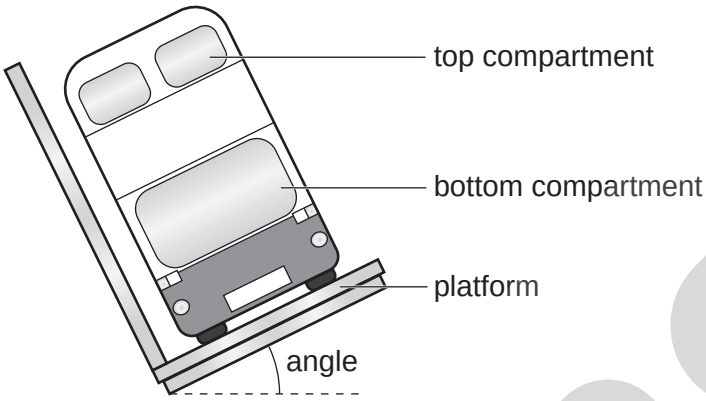

Fig. 3.1

The platform is used to test the stability of the bus.

The angle the bus makes with the horizontal is gradually increased until the bus begins to topple to the left.

Explain why the bus begins to topple.

.....

.....

..... [1]

(b) There are 30 passengers in the upper compartment of the bus and 2 passengers in the bottom compartment of the bus.

State how this affects the stability of the bus and the reason for this.

.....

.....

..... [2]

www.root19.com +91 - 9969 353 391

(c) A bus is travelling along a straight road. The bus and the driver have a combined mass of 16 000 kg when there are no passengers in it. The bus has 73 passengers. The average mass of each of the passengers is 65 kg.

(i) Calculate the total mass of the bus, the driver and the 73 passengers.

mass = ... [2]

(ii) The fully loaded bus accelerates uniformly from rest to a speed of 14 m/s. The time taken to reach a speed of 14 m/s is 20 s.

Calculate the resultant force on the bus during the acceleration.

force = ... [2]

[Total: 7]

© UCLES 2020
www.root19.com

+91 - 9969 353 301

4 **(a)** Describe, in terms of molecules, what happens when a liquid evaporates.

.....

.....

.....

.....

.....

..... [4]

(b) Fig. 4.1 shows wet clothes drying on a washing line in an outside area.

Fig. 4.1

State **two** changes in the weather that help the wet clothes to dry more quickly.

1. .....

2. .....
[2]

[Total: 6]

www.root19.com +91 - 9969 353 391

5 **(a)** Fig. 5.1 shows a plastic cup. The cup contains sand, an electric heater and a thermometer.

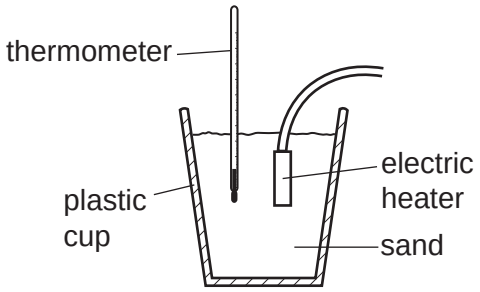

Fig. 5.1

The power of the heater is 50 W. The mass of the sand in the cup is 550 g. The initial temperature of the sand is 20 °C. The heater is switched on for 2.0 minutes. The temperature is recorded until the temperature stops increasing. The highest temperature recorded by the thermometer is 33 °C.

(i) Calculate the energy supplied by the heater.

energy = ... [2]

(ii) Calculate a value for the specific heat capacity of the sand, using your answer to **(a)(i)** and the data in the question.

specific heat capacity = ... [3]

(iii) Explain why the specific heat capacity of sand may be different from the value calculated in **(a)(ii)**.

.....

..... [2]

www.root19.com +91 - 9969 353 301

(b) On a sunny day, the temperature of the sand on a beach is much higher than the temperature of the sea.

Explain why.

.....

.....

..... [2]

(c) Draw a labelled diagram to show the structure of a thermocouple thermometer.

[3]

[Total: 12]

© UCLES 2020
www.root19.com

+91 - 9969 353 391

6 **(a)** Fig. 6.1 shows crests of a sound wave after reflection from a solid surface.

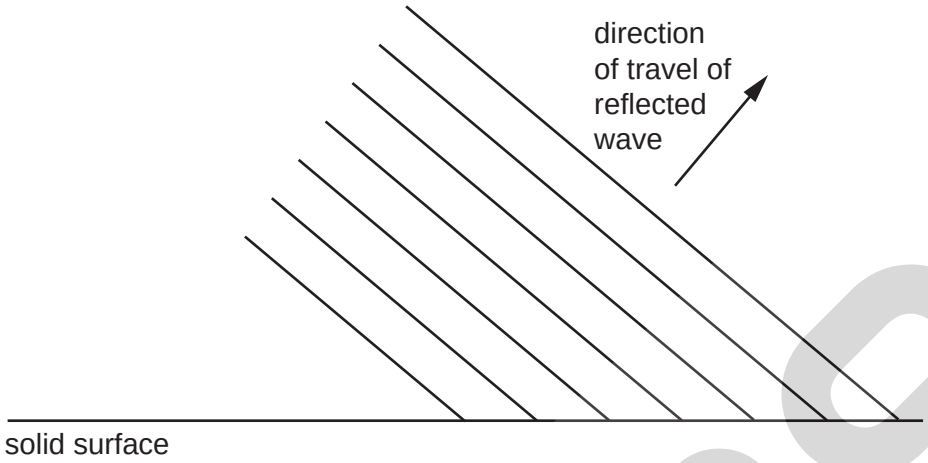

Fig. 6.1

On Fig. 6.1, draw **three** crests of the incident wave. [3]

(b) Tick **four** statements in the list below that are **false** for a sound wave that is audible to a healthy human ear.

The wave is longitudinal.	☐
The wave is transverse.	☐
The frequency of the wave is 1 Hz.	☐
The frequency of the wave is 1 kHz.	☐
The frequency of the wave is 1 MHz.	☐
The wave travels in a vacuum.	☐
The wave could travel in aluminium.	☐

[3]

(c) State a typical value for the speed of a sound wave in water.

..... [1]

[Total: 7]

www.root19.com +91 - 9969 353 301

7 Fig. 7.1 shows red light travelling from air into a prism made of diamond. The path of the red light is incomplete.

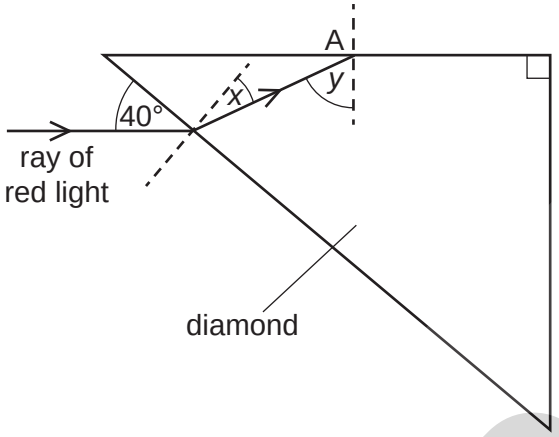

Fig. 7.1 (not to scale)

(a) The refractive index of diamond is 2.42.

Calculate angle *x*.

angle *x* = ... [2]

(b) Explain the term *total internal reflection*.

.....

.....

.....

.....

..... [3]

(c) The angle *y* is greater than the critical angle of diamond.

On Fig. 7.1, draw the path of the red light through and out of the prism after point A. [2]

[Total: 7]

www.root19.com +91 - 9969 353 391

8 **(a)** **(i)** Describe what is meant by an *electric field*.

.....

..... [1]

(ii) State what is meant by the *direction* of an electric field.

.....

..... [1]

(b) Fig. 8.1 shows a polystyrene ball covered with aluminium paint. The polystyrene ball is suspended between two charged metal plates by an insulated thread.

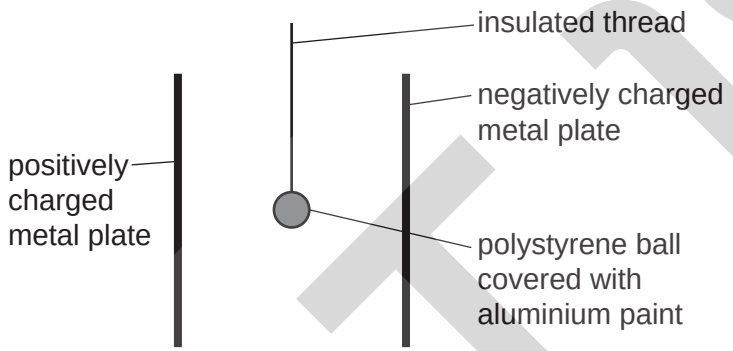

Fig. 8.1

The ball oscillates between the two charged plates.

Explain why the ball oscillates.

.....

.....

.....

.....

.....

..... [4]

(c) There is a current of 0.29 A in an electrical circuit.

Calculate the time taken for a charge of 15 C to flow through the electrical circuit.

time = ... [3]

[Total: 9]

www.root19.com +91 - 9969 353 301

9 Fig. 9.1 shows a simple direct current (d.c.) electric motor. The coil rotates about the axis when there is a current in the coil. The coil is connected to the rest of the circuit by the brushes.

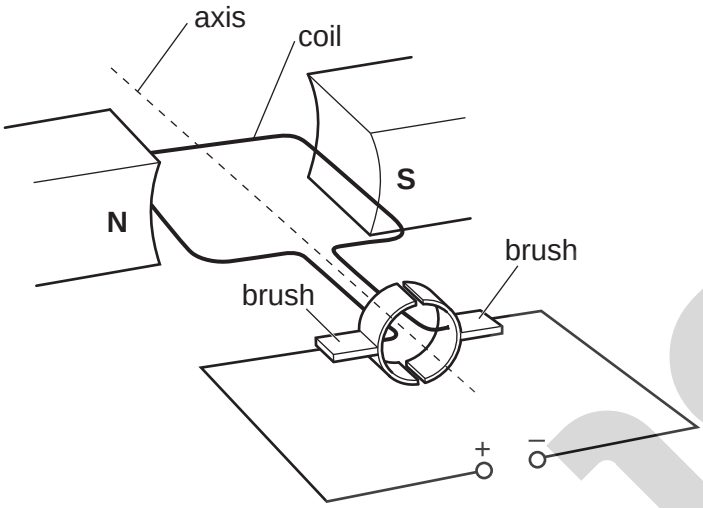

Fig. 9.1

(a) **(i)** On Fig. 9.1, draw a pair of arrows to show which way the coil rotates. Explain the direction you have chosen.

.....

.....

..... [3]

(ii) On Fig. 9.1, draw an arrow to show the direction in which electrons flow through the coil. [1]

(iii) Explain why the electrons flow in the direction you have shown in **(a)(ii)**.

.....

..... [1]

www.root19.com +91 - 9969 353 391

(b) State any difference each of the following changes makes to the rotation of the coil in Fig. 9.1:

(i) changing the polarity of the power supply to that shown in Fig. 9.2

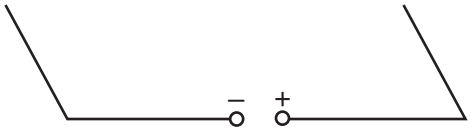

Fig. 9.2

..... [1]

(ii) changing the coil to the new coil shown in Fig. 9.3

Fig. 9.3

..... [1]

(iii) using a stronger magnetic field.

..... [1]

[Total: 8]

www.root19.com +91 - 9969 353 301

10 **(a)** A radioactive nucleus of carbon decays to a nucleus of nitrogen by emitting a particle.

Complete the nuclide equation and state the name of the particle.

$$^{14}_{6}C \longrightarrow {}^{14}_{7}N + {}^{\cdots\cdots}_{\cdots\cdots}X$$

name of particle X …….. [3]

(b) A radiation detector in a laboratory records a reading of 10 counts/min. There are no radioactive samples in the laboratory.

(i) Explain why the radiation detector records a reading and suggest a possible source.

explanation .....

source .....

..... [2]

(ii) Carbon-14 has a half-life of 5700 years. There are atoms of carbon-14 in all living organisms.

An archaeologist digs up some ancient wood. In the same laboratory as in **(b)(i)**, a sample of this ancient wood gives a reading of 20 counts/min. An equivalent sample of living wood gives a reading of 80 counts/min. It is suggested that the age of the ancient sample is 11 400 years.

Do a calculation to check whether this suggestion is correct.

[4]

[Total: 9]

www.root19.com +91 - 9969 353 391

BLANK PAGE

© UCLES 2020
www.root19.com

+91 - 9969 353 391

BLANK PAGE

Permission to reproduce items where third-party owned material protected by copyright is included has been sought and cleared where possible. Every reasonable effort has been made by the publisher (UCLES) to trace copyright holders, but if any items requiring clearance have unwittingly been included, the publisher will be pleased to make amends at the earliest possible opportunity.

To avoid the issue of disclosure of answer-related information to candidates, all copyright acknowledgements are reproduced online in the Cambridge Assessment International Education Copyright Acknowledgements Booklet. This is produced for each series of examinations and is freely available to download at www.cambridgeinternational.org after the live examination series.

Cambridge Assessment International Education is part of the Cambridge Assessment Group. Cambridge Assessment is the brand name of the University of Cambridge Local Examinations Syndicate (UCLES), which itself is a department of the University of Cambridge.

www.root19.com +91 - 9969 353 391